REVISIONS				
ZONE	REV	DESCRIPTION	DATE	APPROVED
VA	CJC	ISSUED FOR APPROVAL	07-18-06	APPROVED
VA	A	ISSUED FOR CONSTRUCTION	-------	

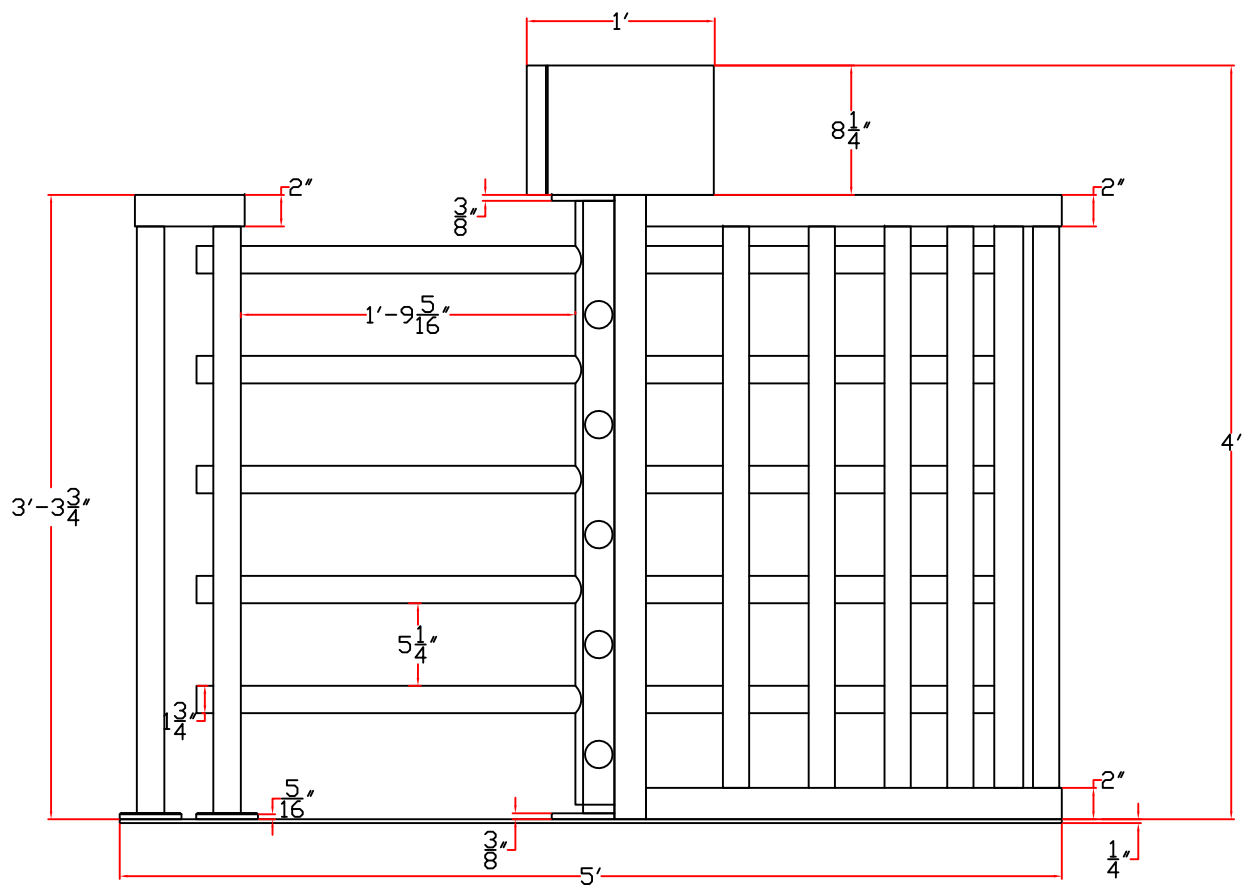

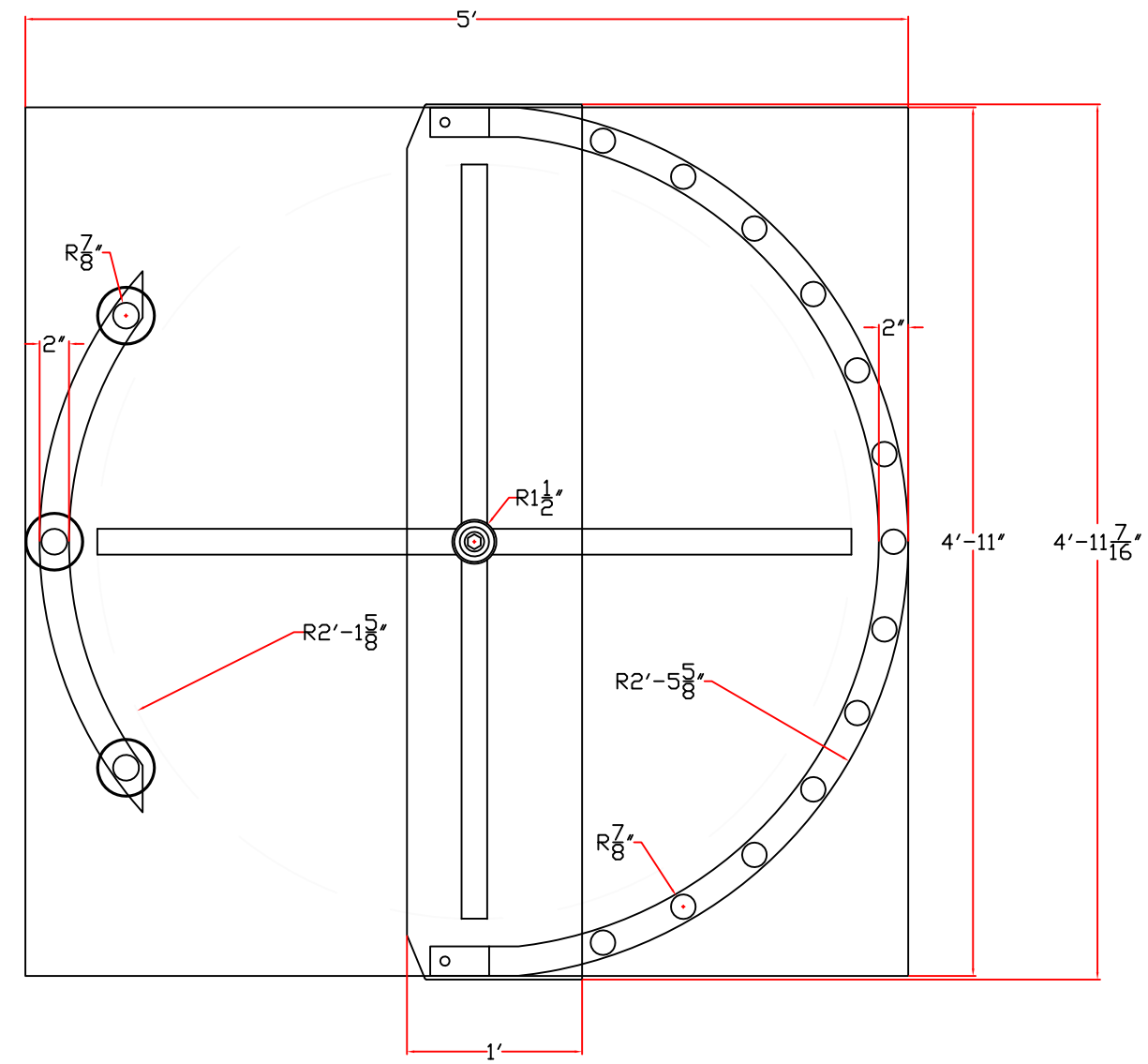

www.TURNSTILES.us

8641 South Warhawk Rd.
Conifer, Colorado 80433
Tel: 303-670-1099

Patrick McAllister

ELITE SERIES

HALF HEIGHT TURNSTILE
EHHG (M) (E)

SIZE	DRAWING NO.	REV
D	HALF-HEIGHT TURNSTILE	A
SCALE NONE		SHEET 1 OF 1